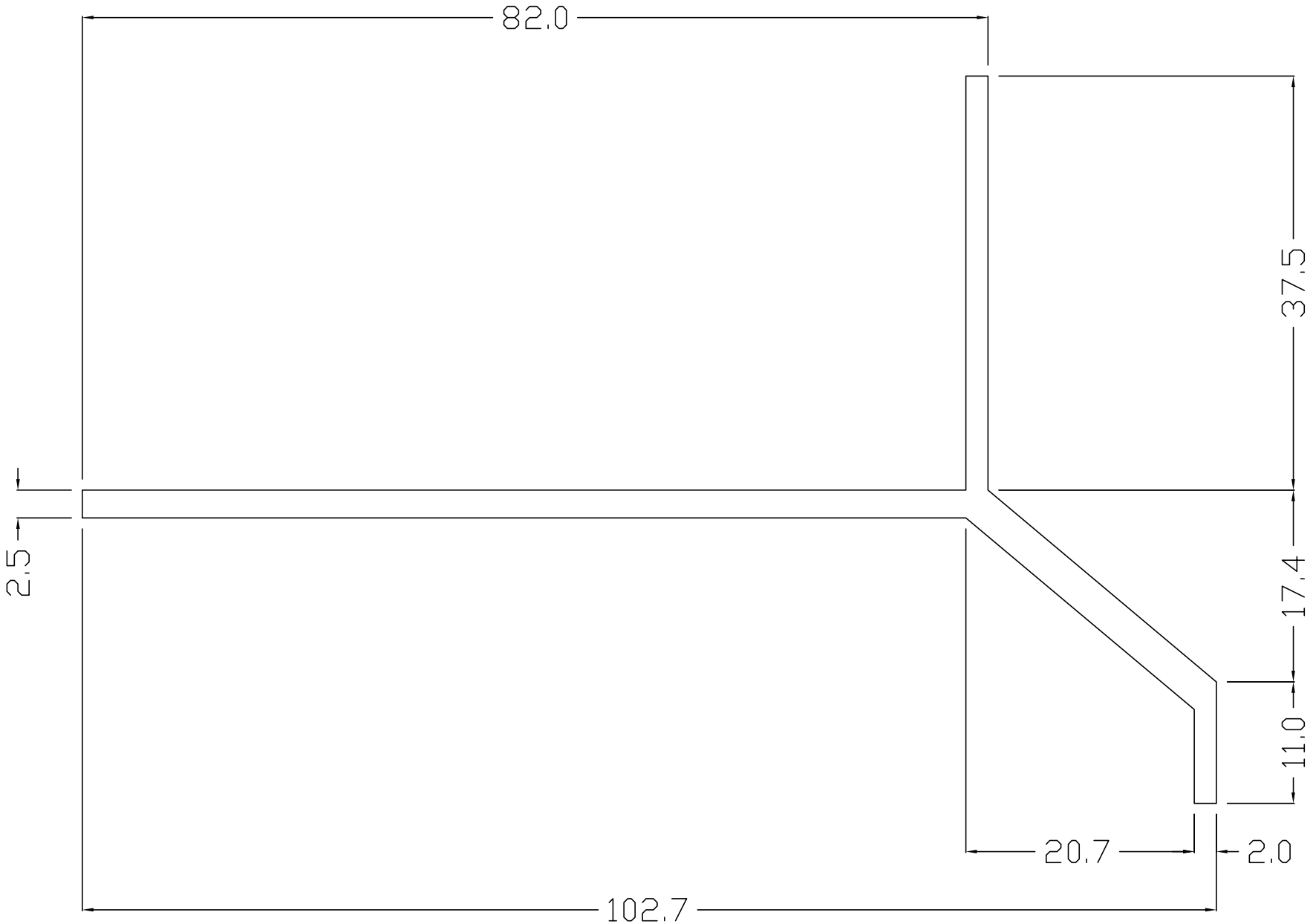Schluter®- BARA-RK